DETAIL "A"

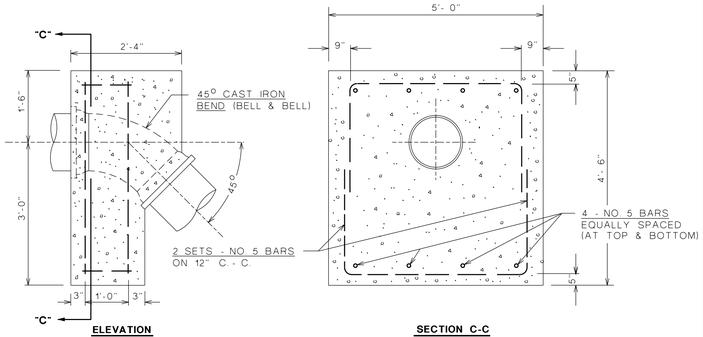

ELEVATION

SECTION C-C

DETAIL "B"

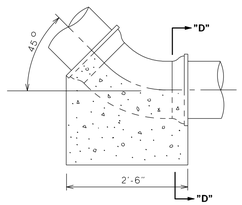

ELEVATION

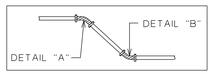

NOTE: ANCHORS SHALL BE CONSTRUCTED OF CLASS "A" CONCRETE (3500 P.S.I.)

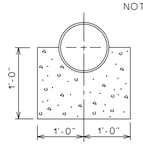

SECTION D-D

STD. ACHORAGE DETAILS FOR 45° & 22 1/2° BENDS

90° BEND DIA. OF MAIN	A	B	C	D	E
6"	2'-0"	2'-4"	1'-8"	1'-6"	0'-9"
8"	3'-4"	3'-0"	1'-11"	1'-9"	0'-9"
12"	5'-6"	4'-0"	2'-4"	2'-1"	0'-9"
16"	6'-0"	5'-0"	3'-0"	2'-8"	1'-0"

45° BEND DIA. OF MAIN	A	B	C	D	E
8"	2'-4"	2'-0"	1'-11"	1'-9"	0'-9"
12"	3'-6"	2'-6"	2'-4"	2'-1"	0'-9"
16"	5'-4"	3'-0"	3'-0"	2'-8"	1'-0"

22 1/2° BEND DIA. OF MAIN	A	B	C	D	E
12"	2'-6"	2'-0"	2'-0"	1'-9"	0'-9"
16"	3'-4"	2'-6"	3'-0"	2'-8"	1'-0"
20"	4'-0"	3'-0"	4'-0"	3'-6"	1'-0"

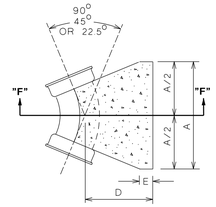

PLAN

THRUST BLOCKS SHALL BE CONSTRUCTED OF CLASS "A" CONCRETE. (3500 P.S.I.)

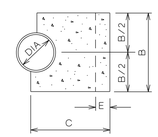

SECTION F-F

STD. THRUST BLOCK AT BENDS

TEE SIZE D	D_1	A	B	C	D	E
8"	8"	3'-0"	2'-3"	2'-0"	1'-9"	0'-6"
12"	8"	3'-0"	2'-5"	2'-0"	1'-9"	0'-6"
12"	12"	4'-0"	2'-9"	3'-0"	2'-1"	0'-8"
16"	8"	3'-0"	2'-9"	2'-0"	1'-9"	0'-6"
16"	12"	4'-0"	3'-1"	3'-0"	2'-1"	0'-8"
16"	16"	5'-0"	3'-8"	4'-0"	2'-8"	0'-11"

PLUG DIA. (D_1) OF PIPE D_1	A	B	C
6"	2'-0"	1'-8"	1'-10"
8"	3'-0"	1'-11"	2'-0"
12"	4'-0"	2'-1"	3'-0"
16"	5'-0"	2'-8"	4'-0"

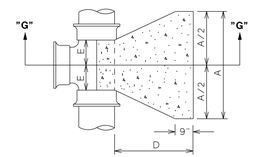

PLAN

THRUST BLOCKS SHALL BE CONSTRUCTED OF CLASS "A" CONCRETE. (3500 P.S.I.)

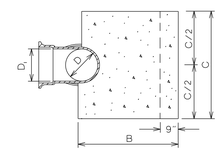

SECTION G-G

STD. THRUST BLOCK AT TEE & PLUG

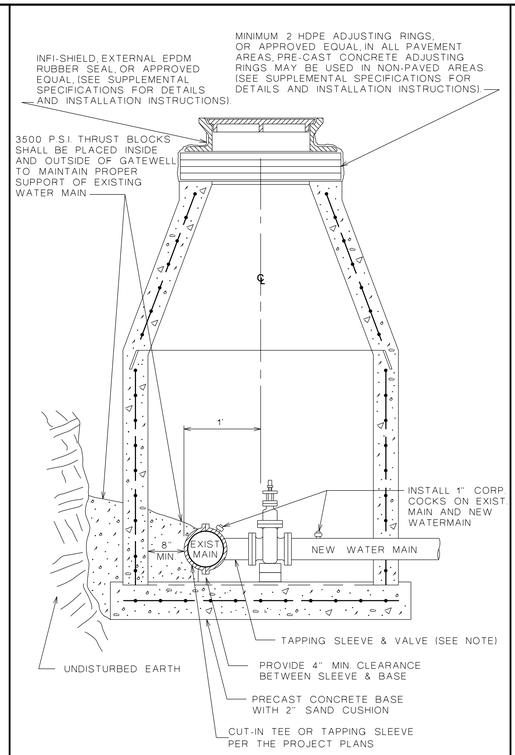

NOTE: THE TAPPING VALVE & WELL SHALL BE 6' DIA. FOR ALL TAPS FROM 8" ON 8" TO 12" ON 16", SEE CONSTRUCTION DRAWINGS FOR GATE WELL DIMENSIONS IF THE TAP IS OUTSIDE THESE DIMENSIONS.

STANDARD PRECAST TAPPING VALVE & WELL

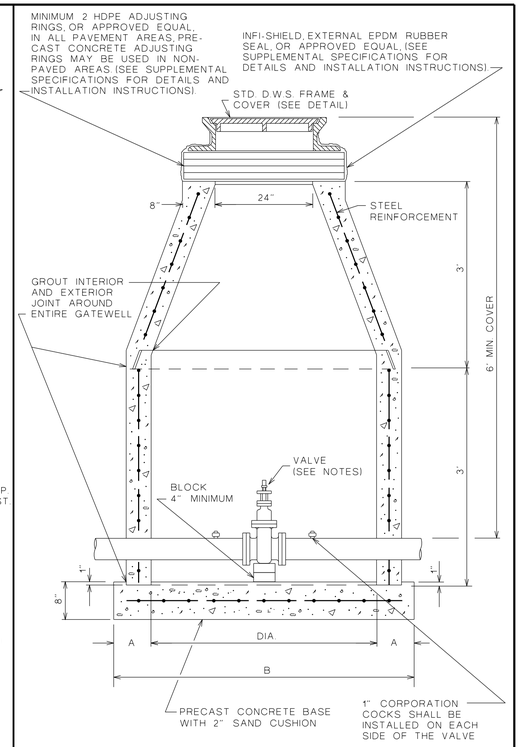

DIA.	60"	72"
A	5"	7"
B	84"	96"

SIZE OF MAIN	DIA. OF GATE WELL
6"	5'-0"
8"	5'-0"
10"	5'-0"
12"	6'-0"
14"	6'-0"
16"	6'-0"

STANDARD PRECAST GATE WELLS

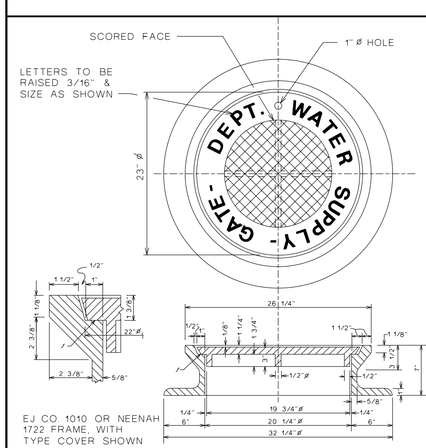

NOTE: GATEWELL FRAME & COVER SHALL BE MADE OF CAST IRON (A.S.T.M. A - 48 CLASS 30) AS DETAILED HERE & D.M.W.D. DETAIL SHEET NO. A - 120 - 234

WEIGHT (FRAME & COVER)----------410 LBS. MIN.

STD. GATE WELL FRAME & COVER

NOTE: THE WATERMAIN ELEVATION AT THE ℄ OF THE SEWER PIPE SHALL BE MAINTAINED FOR A DISTANCE EQUAL TO THAT FROM TOP OF BANK TO TOP OF BANK BEFORE ANY FITTINGS ARE INSTALLED OR BREAK IN GRADE IS MADE.

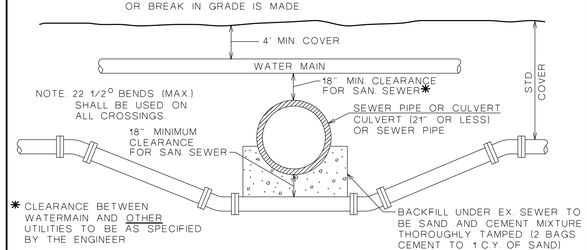

STD. SEWER OR CULVERT CROSSING

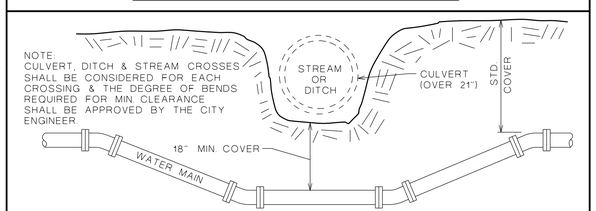

STD. CULVERT, DITCH & STREAM CROSSING

NOTE: THE WATERMAIN ELEVATION AT THE ℄ OF THE DITCH SHALL BE MAINTAINED FOR A DISTANCE EQUAL TO THAT FROM TOP OF BANK TO TOP OF BANK BEFORE ANY FITTINGS ARE INSTALLED OR BREAK IN GRADE IS MADE.

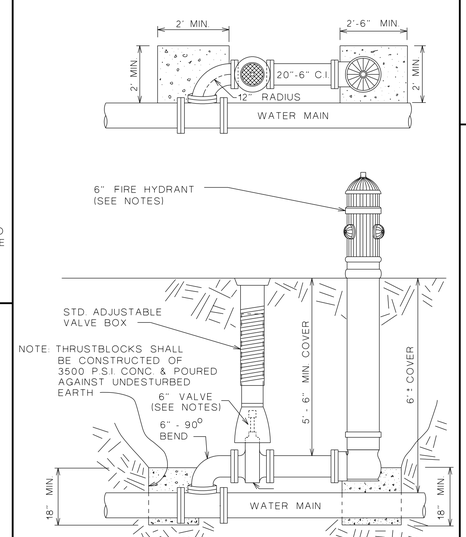

STD. HYDRANT SETTING

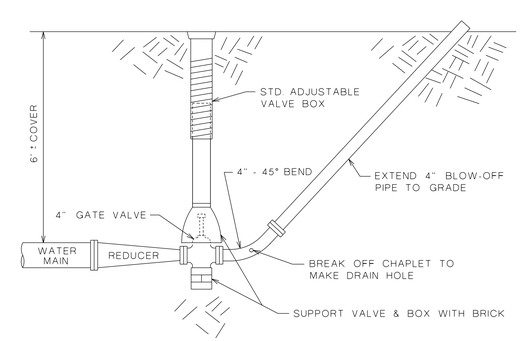

STD. BLOW-OFF CONNECTION

NOTES: ALL 4" THROUGH 12" DIA. VALVES TO BE EJ CO. FLOWMASTER® RESILIENT WEDGE GATE VALVES, OR APPROVED EQUAL

FIRE HYDRANTS WILL BE EJ CO. TYPE 5BR250, OR APPROVED EQUAL WITH TWO 3 3/4" PUMPER NOZZLES

TAPPING SLEEVES WILL BE ROMAC® SST, OR APPROVED EQUAL

REVISIONS DATE	BY	CHANGE
12/16/2011	R.M.A.	CHANGED NAME 'EAST JORDAN'
5/19/2009	R.M.A.	NOTE CHANGES
3/10/2005	R.M.A.	ADDED APPURTENANCE INFORMATION
04/14/2004	D.D.Z.	REMOVED STEPS IN GATEWELL
12/4/2002	R.M.A.	ADDED HDPE ADJ. RINGS/INFI-SHIELD
1-29-93	W.L.K.	REDRAWN

DIVISION OF ENGINEERING

CITY OF WARREN, MICHIGAN

WATER MAIN DETAILS

SCALE: NONE

APPROVED BY: J.V.H. DRAWN BY: W.L.K.

SHEET 1 OF 1 SHEETS DATE: 1-29-93

DW-1